+44 (0)1454 319524
sales@stedall.co.uk
www.stedall.co.uk

Internal Handle – Two Point

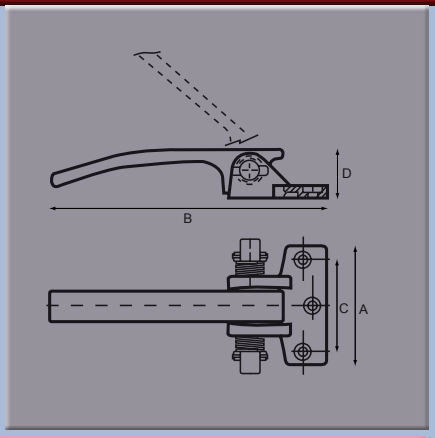

Part No.	A	B	C	D	E	F	G	H	Finish
64418	mm 71	153	54	28					Black

Glass fibre polyamide body.

Zinc plated steel components

Connecting Rods

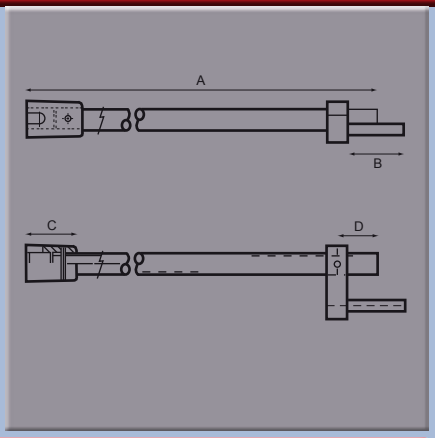

Part No.	A	B	C	D	E	F	G	H	Finish
65578 Upper	mm916	33	32	23					Black
65588 Lower	mm916	33	32	23					Black

Material: Rod in painted steel

Connecting Rod

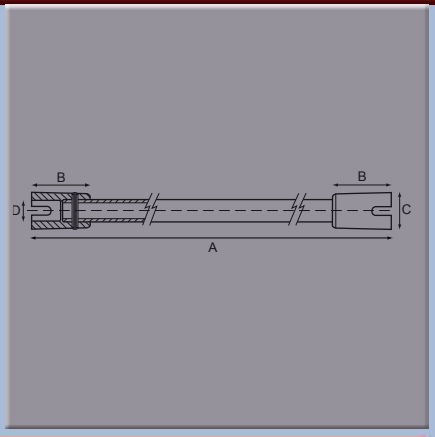

Part No.	A	B	C	D	E	F	G	H	Finish
67677	mm780	32	21	12					Black

Material: Rod in painted steel

Connecting Rod with Handle

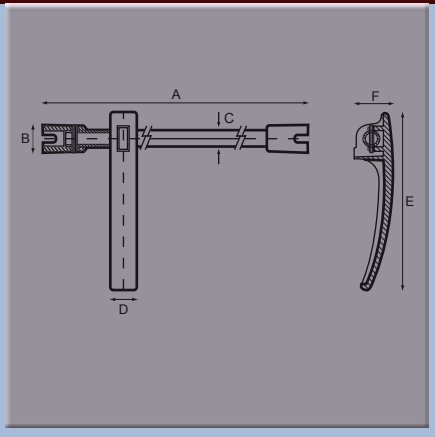

Part No.	A	B	C	D	E	F	G	H	Finish
67558	mm1200	21	12	13	128	28			Black

Materials: Rod in painted steel complete with glass fibre polyamide handle