+44 (0)1454 319524
sales@stedall.co.uk
www.stedall.co.uk

Licence Holders

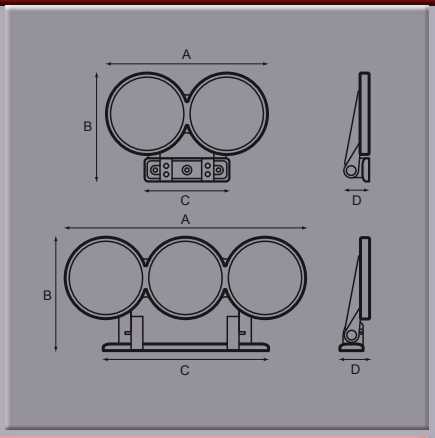

Part No.	A	B	C	D	E	F	G	H	Finish
441	mm169	114	90	27					Grey Enamel
444	mm252	117	152	30					Black Enamel

Material: Die cast zinc alloy, hinged for access, with glass covers held by stainless steel retaining rings.

Part No. 441 Two way

Part No. 444 Three Way

Curtain Track Fittings

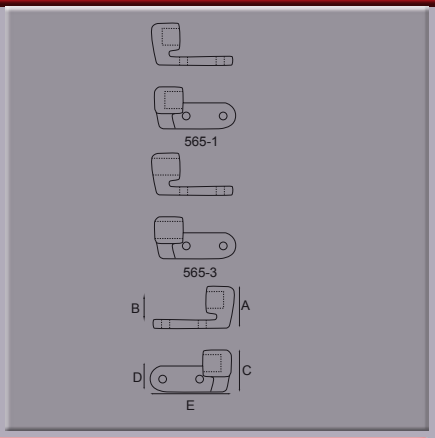

Part No.	A	B	C	D	E	F	G	H	Finish
565-1	mm 25	17	25	15	43				Black
565-2	mm 25	17	25	15	43				Black
565-3	mm 25	17	25	15	43				Black
565-4	(10mm OD)								Black

Material: Fittings in Nylon

Part No. 565-1 End support R/H

Part No.. 565-2 End support L/H

Part No. 565-3 Centre Support

Part No. 565-4 Powder coated aluminium tube, packs of 2 X 2M

Modesty Panels

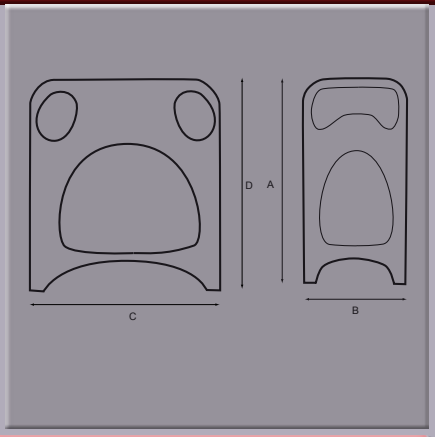

Part No.	A	B	C	D	E	F	G	H	Finish
9306G	mm890	440							Grey
9307G	mm		825	890					Grey

Depth 60mm

Polyurethane foam over steel frame covered in grained PVC

Supplied without panel infill - customer to supply and fit colour co-ordinated panel

Rear recessed to take ashtray - Part No. 64520

Tiger Stripe – Butt Carrier

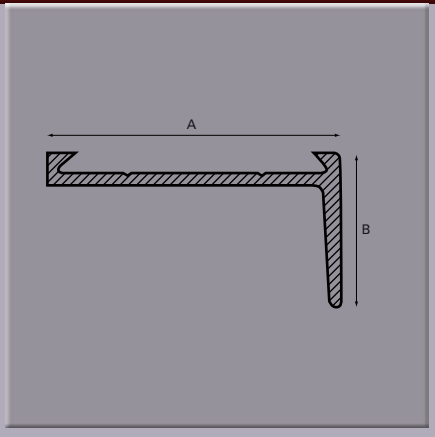

Part No.	A	B	C	D	E	F	G	H	Finish
SVF1568	mm 57	31							Self Colour

Supplied in 3 metre lengths.

Mill finish aluminium extrusion for use with Part No. SVF1570 & Part No. SVF1570Y insert.